CUI Devices is now Same Sky! Learn More

SERIES: SJ1-352XNG | DESCRIPTION: AUDIO JACK

FEATURES

- low profile design
- switch options include:
- no switch
- tip switch
- tip and ring switch

PART NUMBER KEY

SJ1 - 352 X NG - X

Base Number

Switch Options:
3 = no switch
4 = tip switch
5 = tip and ring switch

Color Options:
"blank" = black
GR[1] = green
PI[1] = pink

Note: 1. Tip and ring switch model only.

SPECIFICATIONS

parameter	conditions/description	min	typ	max	units
rated input voltage			12		Vdc
rated input current				1	A
contact resistance	between terminal and mating plug between terminal in a closed circuit			100 50	mΩ mΩ
insulation resistance	at 500 Vdc	100			MΩ
voltage withstand	for 1 minute			500	Vac
insertion/withdrawal force		0.3		3	kg
operating temperature		-25		85	°C
life			5,000		cycles
flammability rating	UL94V-0				
RoHS	yes				

MECHANICAL DRAWING

units: mm
tolerance:
X.X ±0.30 mm
X.XX ±0.25 mm
X.XXX ±0.20 mm
PCB: ±0.05 mm
unless otherwise specified

DESCRIPTION	MATERIAL	PLATING/COLOR
terminal 1	copper alloy t=0.20	silver over nickel
terminal 2	stainless steel t=0.20	silver over nickel
terminal 3	stainless steel t=0.20	silver over nickel
terminal 4	brass t=0.40	silver over nickel
terminal 5	brass t=0.40	silver over nickel
bushing	brass	nickel
housing	PBT (UL94V-0)	see color options

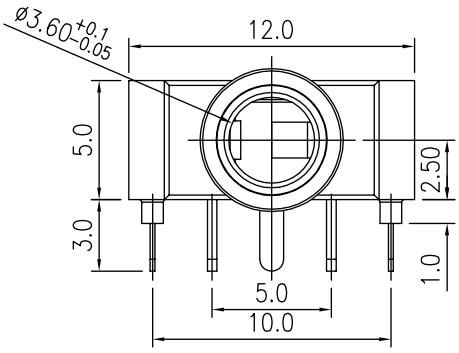

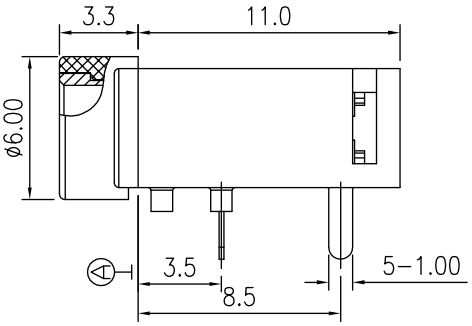

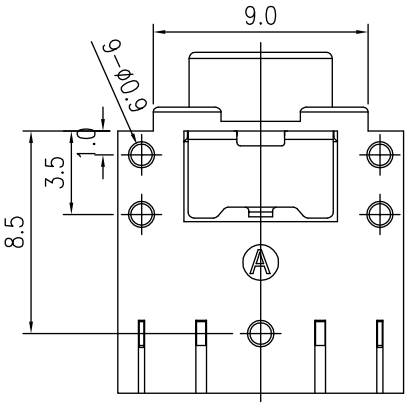

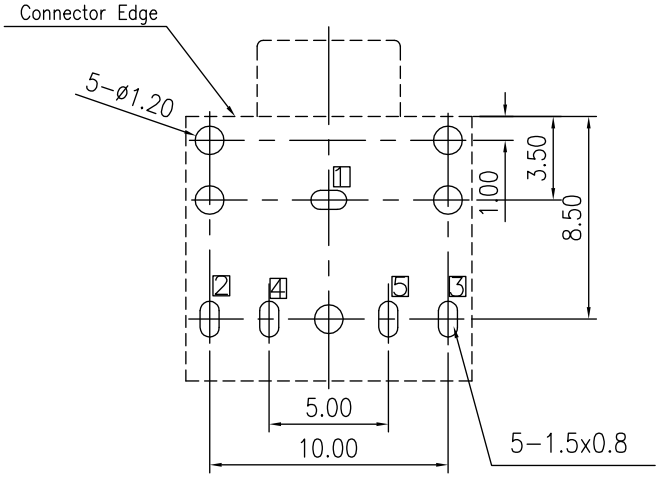

Recommended PCB Layout
Top View

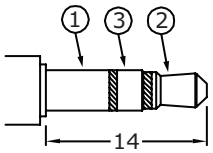

Ø3.5 MATING PLUG

Model No.	SJ1-3523NG	SJ1-3524NG	SJ1-3525NG
Schematic	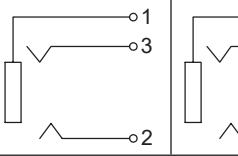	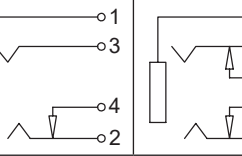	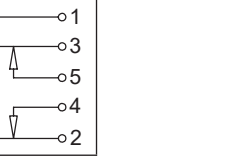
PIN			
1	sleeve	sleeve	sleeve
2	tip	tip	tip
3	ring	ring	ring
4	NP	tip switch	tip switch
5	NP	NP	ring switch

SOLDERABILITY

parameter	conditions/description	min	typ	max	units
wave soldering	for max 5 seconds	255	260	265	°C

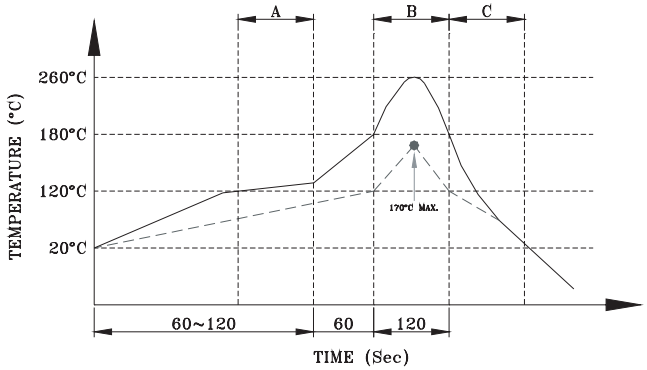

A. Preheating
B. Soldering
C. Cooling

——— Pin Temperature
– – – – Component Temperature

REVISION HISTORY

rev.	description	date
1.0	initial release	10/21/2005
1.01	new template applied	01/25/2012
1.02	changed terminal plating to silver	02/13/2019
1.03	brand update	10/10/2019
1.04	product reengineered for improved manufacturability and production yield, see PCN for details	03/30/2023
1.05	updated housing mold	07/29/2024
1.06	CUI Devices rebranded to Same Sky	09/12/2024

The revision history provided is for informational purposes only and is believed to be accurate.

Same Sky offers a one (1) year limited warranty. Complete warranty information is listed on our website.

Same Sky reserves the right to make changes to the product at any time without notice. Information provided by Same Sky is believed to be accurate and reliable. However, no responsibility is assumed by Same Sky for its use, nor for any infringements of patents or other rights of third parties which may result from its use.

Same Sky products are not authorized or warranted for use as critical components in equipment that requires an extremely high level of reliability. A critical component is any component of a life support device or system whose failure to perform can be reasonably expected to cause the failure of the life support device or system, or to affect its safety or effectiveness.